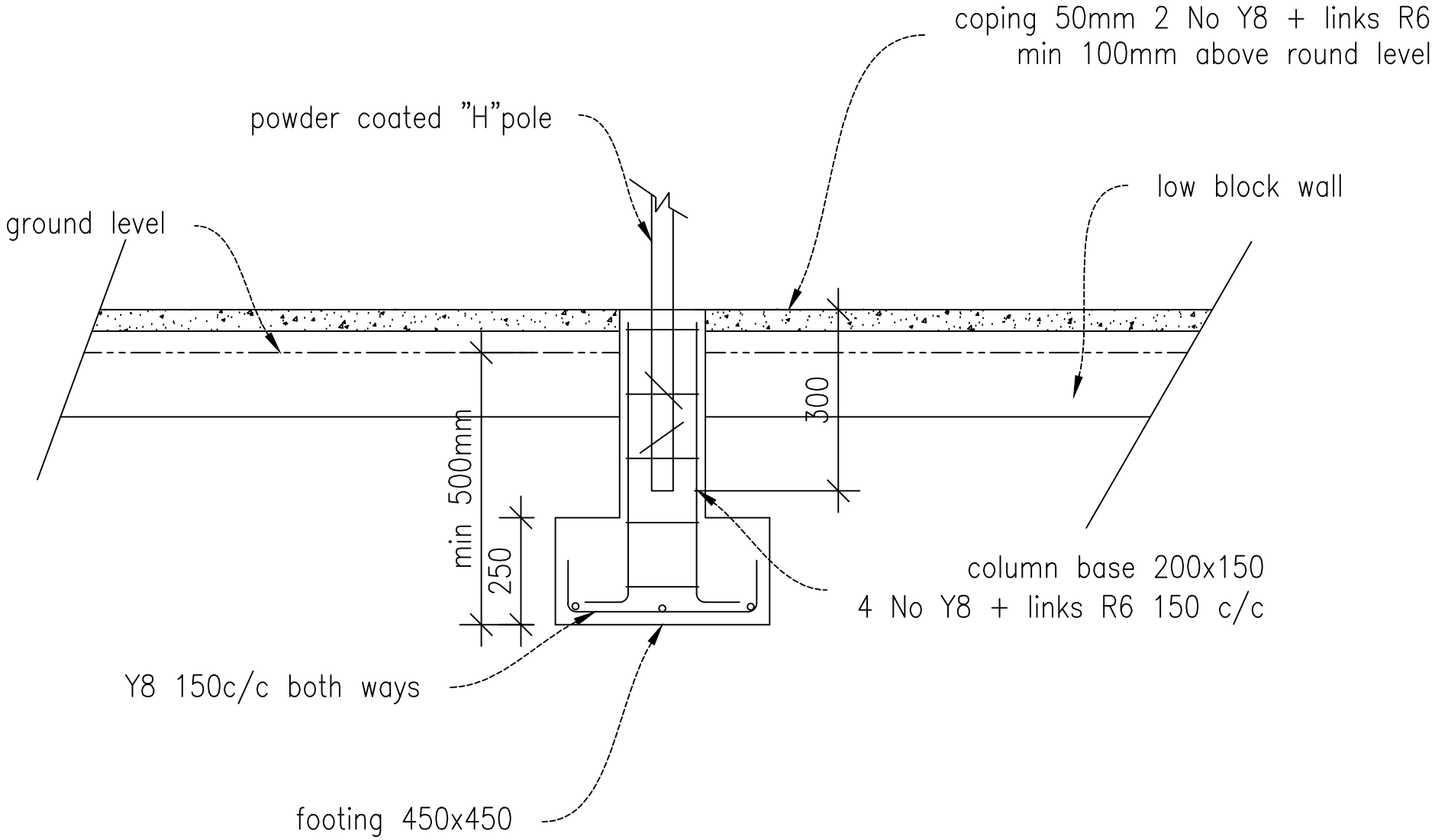

REVISIONS			CLIENT	PROJECT	DRAWING TITLE	DRG.No.
DESCRIPTION	DATE		EWF	PROPOSED REPLACEMENT OF FENCING	FOOTING DETAIL	SWP 02
						SCALE: 1:10
						05/09/2023